12VDC Subfractional Permanent-Magnet Parallel-Shaft Gearmotors

Dayton

- Enclosure: totally enclosed nonventilated
- Gearcase: die-cast zinc
- Lubrication: grease-filled
- Gears: spur
- Bearings: bronze sleeve on both case and motor
- Mounting: all-position, face
- Rotation: reversible
- Brushes: externally replaceable
- Ambient: 40°C

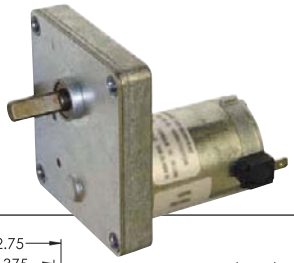

1LNG7

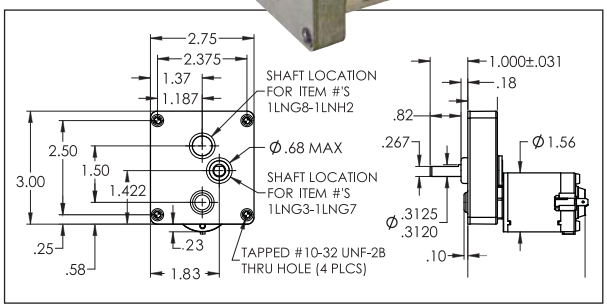

Nameplate RPM	Max. Torque	Overhung Load	Input HP	Gear Ratio	Full Load Amps	Length Less Shaft	Item No.
0.5 RPM	50 in-lb	40 lb	1/2000	2476:1	0.15 A	3 1/4 in	**1LNG3**
1.5 RPM	25 in-lb	40 lb	1/1000	931:1	0.16 A	3 1/4 in	**1LNG4**
4.5 RPM	38.1 in-lb	40 lb	1/200	530:1	0.6 A	3 1/4 in	**1LNG6**
9 RPM	35 in-lb	40 lb	1/120	492:1	1 A	3 1/4 in	**1LNG7**
12 RPM	40 in-lb	40 lb	1/90	254:1	1.1 A	3 1/4 in	**1LNG8**
17 RPM	16 in-lb	13 lb	1/160	254:1	0.75 A	3 in	**1LNG9**
25 RPM	16 in-lb	13 lb	1/150	172:1	1 A	3 1/4 in	**1LNH1**
50 RPM	10 in-lb	13 lb	1/90	74:1	1.1 A	3 1/4 in	**1LNH2**

12VDC and 24VDC Subfractional Permanent-Magnet Parallel-Shaft Gearmotors

Dayton

- Enclosure: totally enclosed nonventilated
- Gearcase: die-cast zinc
- Lubrication: grease-filled
- Gears: spur, power metal and steel
- Bearings: bronze sleeve on both case and motor
- Mounting: all-position, face
- Rotation: reversible
- Ambient: 40°C

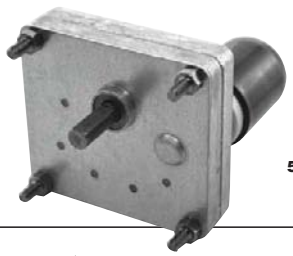

52JE46

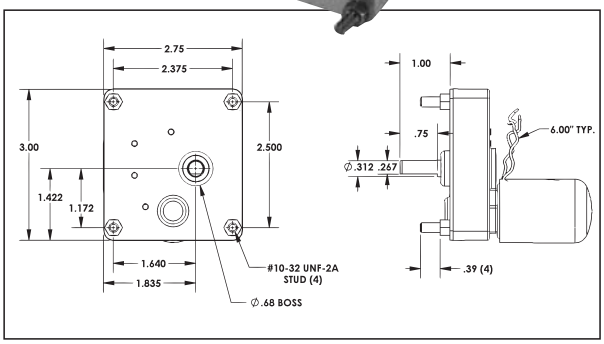

Nameplate RPM	Max. Torque	Overhung Load	Input HP	Gear Ratio	Full Load Amps	Length Less Shaft	Item No.
12V DC							
0.5 RPM	50 in-lb	30 lb	1/2800	4672:1	0.1 A	3 in	**52JE46**
1.5 RPM	46 in-lb	30 lb	1/2800	3822:1	0.3 A	3 in	**52JE47**
3.4 RPM	44 in-lb	30 lb	1/425	1575:1	0.5 A	3 in	**52JE48**
4.5 RPM	43 in-lb	30 lb	1/325	2027:1	0.7 A	3 in	**52JE49**
8.8 RPM	41 in-lb	30 lb	1/175	938.2:1	1 A	3 in	**52JE50**
12 RPM	40 in-lb	30 lb	1/125	594.4:1	1.3 A	3 in	**52JE51**
17 RPM	30 in-lb	30 lb	1/125	384:1	1.4 A	3 in	**52JE52**
25 RPM	20 in-lb	30 lb	1/125	273.8:1	1.3 A	3 in	**52JE53**
50 RPM	10 in-lb	30 lb	1/125	139.8:1	1.1 A	3 in	**52JE54**
24V DC							
1.3 RPM	50 in-lb	30 lb	1/230	4672:1	0.16 A	3 in	**52JE55**
4.4 RPM	50 in-lb	30 lb	1/230	2478:1	0.35 A	3 in	**52JE56**
8 RPM	34 in-lb	30 lb	1/200	1430.8:1	0.38 A	3 in	**52JE57**
12 RPM	24 in-lb	30 lb	1/200	938.2:1	0.38 A	3 in	**52JE58**
22 RPM	50 in-lb	30 lb	1/50	300:1	1.4 A	3 39/64 in	**52JE59**
45 RPM	28 in-lb	30 lb	1/50	78.6:1	1.4 A	3 39/64 in	**52JE60**

12VDC and 90VDC Permanent-Magnet Parallel-Shaft Gearmotors

Dayton

- Enclosure: totally enclosed nonventilated
- Gearcase: die-cast zinc
- Lubrication: grease-filled
- Gears: heat-treated steel and acetal
- Bearings: porous bronze sleeve on case; ball on motor
- Mounting: all-position
- Rotation: reversible
- Brushes: externally replaceable
- Ambient: 40°C
- Seals: O-ring type on output shaft
- 90VDC models accept direct motor-mount speed control 2PUX3 (sold separately on Grainger.com)

1LPV8

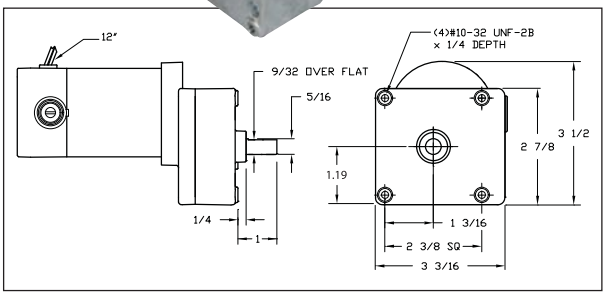

Nameplate RPM	Max. Torque	Overhung Load	Input HP	Gear Ratio	Full Load Amps	Length Less Shaft	Item No.
12V DC							
6 RPM	50 in-lb	50 lb	1/30	430:1	2.1 A	6 1/8 in	**1LPV8**
9 RPM	50 in-lb	50 lb	1/30	273:1	2.1 A	6 1/8 in	**1LPV7**
17 RPM	50 in-lb	50 lb	1/30	141:1	2.1 A	5 5/8 in	**1LPV6**
24 RPM	40 in-lb	50 lb	1/30	100:1	2.1 A	5 5/8 in	**1LPV5**
39 RPM	26 in-lb	50 lb	1/30	62:1	2.1 A	5 5/8 in	**1LPV4**
76 RPM	13 in-lb	50 lb	1/30	32:1	2.1 A	5 5/8 in	**1LPV3**
90V DC							
7 RPM	50 in-lb	50 lb	1/30	430:1	0.35 A	6 1/8 in	**1LPV9**
11 RPM	50 in-lb	50 lb	1/30	273:1	0.35 A	6 1/8 in	**1LPW1**
21 RPM	50 in-lb	50 lb	1/30	141:1	0.35 A	5 5/8 in	**1LPW2**
29 RPM	40 in-lb	50 lb	1/30	100:1	0.35 A	5 5/8 in	**1LPW3**
47 RPM	26 in-lb	50 lb	1/30	62:1	0.35 A	5 5/8 in	**1LPW4**
93 RPM	13 in-lb	50 lb	1/30	32:1	0.35 A	5 5/8 in	**1LPW5**
Replacement Motor Brush Sets							
12VDC							**6YHY4**
90VDC							**6YHY3**