A.

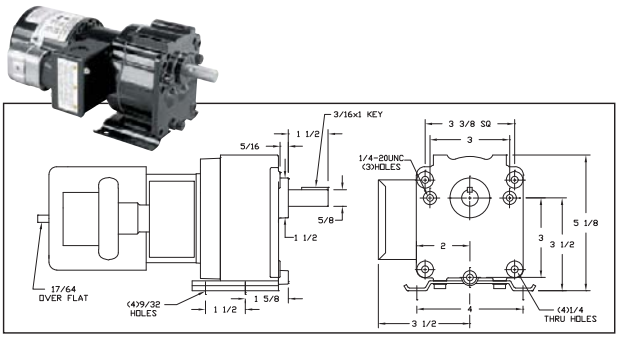

B.

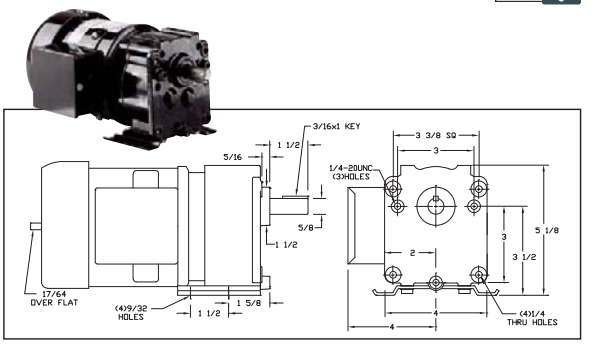

115/230VAC Permanent Split Capacitor Parallel-Shaft Gearmotors

Dayton

- Enclosure: totally enclosed fan-cooled
- Gearcase: die-cast aluminum
- Lubrication: permanent heavy gear oil
- Gears: hardened steel, AGMA Class 9
- Bearings: heavy-duty needle roller and thrust ball bearings on case; ball on motor
- 60/50 Hz
- Rotation: reversible
- Thermal protection: none
- Ambient: 40°C
- Capacitor: included
- Brake: adaptable to 5X400 using number of discs shown in table (sold separately on Grainger.com)

Note: Ratings shown are at 60 Hz. Gearmotors are also operable at 50 Hz, with HP and rpm at 5/6 of the 60-Hz rating.

Key	Nameplate RPM	Max. Torque	Overhung Load	Input HP	Gear Ratio	Full Load Amps	Length Less Shaft	No. of Brake Discs Req.	Item No.
A	15 RPM	202 in-lb	175 lb	1/15 hp	107:1	1.2/0.63	8 3/4 in	1	**4Z518**
	30 RPM	135 in-lb	175 lb	1/15 hp	53:1	1.2/0.63	8 3/4 in	1	**4Z519**
	45 RPM	92 in-lb	175 lb	1/15 hp	35:1	1.2/0.63	8 3/4 in	1	**4Z520**
	70 RPM	61 in-lb	175 lb	1/15 hp	23:1	1.2/0.63	8 3/4 in	1	**4Z521**
	97 RPM	43 in-lb	175 lb	1/15 hp	17:1	1.2/0.63	8 3/4 in	1	**4Z522**
	139 RPM	30 in-lb	175 lb	1/15 hp	12:1	1.2/0.63	8 3/4 in	1	**4Z523**
B	7.8 RPM	320 in-lb	175 lb	1/12 hp	216:1	2.0/1.0	9 9/16 in	1	**6Z816**
	16 RPM	385 in-lb	175 lb	1/6 hp	102:1	2.1/1.1	9 9/16 in	1	**6Z817**
	30 RPM	278 in-lb	175 lb	1/6 hp	58:1	2.1/1.1	9 9/16 in	2	**6Z818**
	41 RPM	210 in-lb	175 lb	1/6 hp	43:1	2.1/1.1	9 9/16 in	2	**6Z819**
	60 RPM	157 in-lb	175 lb	1/6 hp	28:1	2.1/1.1	9 9/16 in	2	**6Z820**
	93 RPM	100 in-lb	175 lb	1/6 hp	19:1	2.1/1.1	9 9/16 in	2	**6Z821**
	161 RPM	60 in-lb	175 lb	1/6 hp	11:1	2.1/1.1	9 9/16 in	2	**6Z822**

115/230VAC Permanent Split Capacitor and 230/460VAC 3-Phase Parallel-Shaft Gearmotors

Dayton

- Gearcase: die-cast aluminum
- Lubrication: permanent heavy gear oil
- Gears: hardened, AGMA Class 9
- Bearings: motor has ball bearings; gearbox has needle bearings and thrust ball bearings throughout
- Oversized output bearings for greater overhung load capacity
- Mounting: all-position, except shaft up (optional bracket 6XF03 for base mounting)
- 60/50 Hz
- Rotation: reversible
- Thermal protection: none
- Ambient: 40°C
- 3/16" x 1" key

Note: Ratings shown are at 60 Hz. Gearmotors are also operable at 50 Hz, with HP and rpm at 5/6 of the 60-Hz rating.

6MK74

Nameplate RPM	Max. Torque	Overhung Load	Input HP	Gear Ratio	Full Load Amps	Length Less Shaft	Item No.
Permanent Split Capacitor, TENV, 115/230V AC, Capacitor Included							
5 RPM	310 in-lb	565 lb	1/12 hp	336:1	1.30/0.65	9 3/4 in	**6MK70**
9 RPM	341 in-lb	491 lb	1/12 hp	180:1	1.30/0.65	9 3/4 in	**6MK71**
14 RPM	330 in-lb	459 lb	1/12 hp	124:1	1.30/0.65	9 3/4 in	**6MK72**
19 RPM	250 in-lb	374 lb	1/12 hp	91:1	1.30/0.65	9 3/4 in	**6MK73**
Permanent Split Capacitor, TEFC, 115/230V AC, Capacitor Included							
29 RPM	270 in-lb	327 lb	1/6 hp	58:1	2.90/1.45	11 3/4 in	**6MK74**
34 RPM	250 in-lb	330 lb	1/6 hp	50:1	2.90/1.45	11 3/4 in	**6MK75**
40 RPM	180 in-lb	303 lb	1/6 hp	43:1	2.90/1.45	11 3/4 in	**6MK76**
59 RPM	135 in-lb	267 lb	1/6 hp	29:1	2.90/1.45	11 3/4 in	**6MK77**
75 RPM	90 in-lb	256 lb	1/6 hp	23:1	2.90/1.45	11 3/4 in	**6MK78**
113 RPM	68 in-lb	222 lb	1/6 hp	15:1	2.90/1.45	11 3/4 in	**6MK79**
160 RPM	45 in-lb	196 lb	1/6 hp	10:1	2.90/1.45	11 3/4 in	**6MK80**
340 RPM	25 in-lb	190 lb	1/6 hp	5:1	2.90/1.45	11 3/4 in	**6MK81**
3-Phase, TEFC, 230/460V AC, Conduit Box Included							
58 RPM	320 in-lb	300 lb	1/3 hp	30:1	1.60/0.80	11 7/8 in	**6MK82**
85 RPM	218 in-lb	300 lb	1/3 hp	20:1	1.60/0.80	11 7/8 in	**6MK83**
173 RPM	109 in-lb	300 lb	1/3 hp	10:1	1.60/0.80	11 7/8 in	**6MK84**
345 RPM	55 in-lb	300 lb	1/3 hp	5:1	1.60/0.80	11 7/8 in	**6MK85**

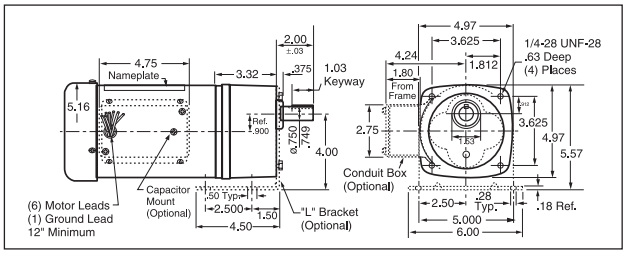

Description	Item No.
Accessories	
L-Shaped Mounting Bracket	**6XF03**
Conduit Box	**6XF01**

6K331

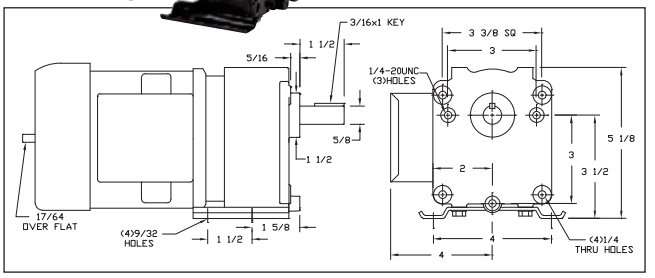

115VAC Split-Phase Parallel-Shaft Gearmotors

Dayton

- Enclosure: totally enclosed fan cooled
- Gearcase: die-cast aluminum
- Lubrication: permanent heavy gear oil
- Gears: hardened steel, AGMA Class 9
- Bearings: heavy-duty needle roller and thrust ball bearings on case; ball on motor
- Mounting: all-position
- 60 Hz
- Rotation: reversible
- Thermal protection: none
- Ambient: 40°C
- Brake: adaptable to 5X400 brake using number of discs shown in table (sold separately on Grainger.com)

Nameplate RPM	Max. Torque	Overhung Load	Input HP	Gear Ratio	Full Load Amps	Length Less Shaft	No. of Brake Discs Req.	Item No.
14 RPM	350 in-lb	175 lb	1/12 hp	127:1	1.75	9 3/8 in	1	**6K325**
27 RPM	275 in-lb	175 lb	1/6 hp	65:1	3.8	9 7/8 in	2	**6K328**
40 RPM	225 in-lb	175 lb	1/6 hp	43:1	3.8	9 7/8 in	2	**6K329**
60 RPM	150 in-lb	175 lb	1/6 hp	28:1	3.8	9 7/8 in	2	**6K331**
90 RPM	100 in-lb	175 lb	1/6 hp	19:1	3.8	9 7/8 in	2	**6K332**
135 RPM	65 in-lb	175 lb	1/6 hp	13:1	3.8	9 7/8 in	2	**6K334**