INDEXA SC11A - Screw Jack

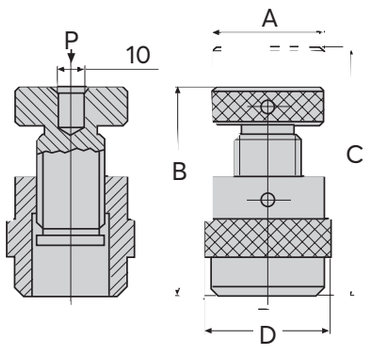

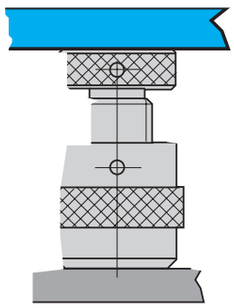

Material: Medium Carbon Steel.
Hardness: HRC 40.
Surface finish: Black Oxide.



Product Number	Diameter x Height A x B (Min)	Dimensions (mm) C	D	Holding Load (kN)	Weight each	Order Code IND-425	Price/1 THB
SC20032050	32 x 40mm	60	32	72	230g	-3057D	3213.00
SC20070140	65 x 100mm	150	70	135	274g	-3057P	11718.00

SU25 - Step Block

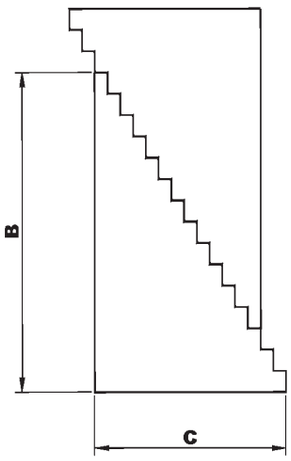

Material: Medium Carbon Steel.
Hardness: HRC 32 - 36.
Surface finish:
Black Oxide.



Product Number	Supporting Height	Dimensions (mm) A	B	C	Weight each	Order Code IND-425	Price/1 THB
SU252530	19 - 49		29	17	0.05kg	-3125E	609.00
SU252545	28 - 68	25	45	27	0.12kg	-3125H	641.00
SU252597	58 - 150		97.5	57	0.50kg	-3125L	2216.00
SU253259	38 - 90		59	35	0.24kg	-3132J	1943.00
SU253297	58 - 150	32	97.5	57	0.62kg	-3132L	1943.00
SU2532139	82 - 210		139	81	1.32kg	-3132P	4536.00

SEB - Shoulder Eye Bolt

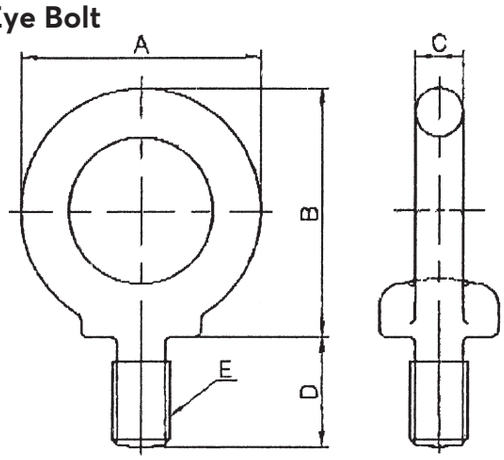



Product Number	Thread (E)	Dimensions (mm) A	B	C	D	Load	Weight each	Order Code IND-425	Price/1 THB
SEB1017	M10	41	41.5	8	18	150kg	0.063kg	-3210S	180.00
SEB1220	M12	50	51	10	22	220kg	0.125kg	-3212S	250.00
SEB1525	M16	60	60	12.5	27	450kg	0.216kg	-3216S	431.00
SEB2030	M20	72	71	16	30	630kg	0.4kg	-3220S	483.00

© 2022

OS21_APAC_TH_0138.indd 1 07/12/2021 09:45