INDEXA FC25 - Spherical Washer Set

2 piece washer set that compensates whenever a stud and clamping surface are not exactly perpendicular.

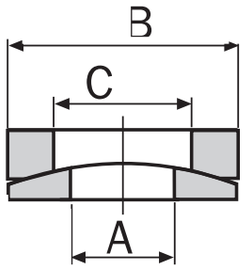

Material: Medium Carbon Steel.
Hardness: HRC 38.
Surface finish: Black Oxide.



Product Number	Dimensions (mm) A	B	C	D	Weight each	Order Code IND-425	Price/1 THB
FC250112	13	26	15	7.5	20g	**-2860D**	**714.00**
FC250216	17	32	19	9.0	30g	**-2860G**	**998.00**
FC250320	21	40	23	12.0	50g	**-2860L**	**1208.00**

FC29 - Swivel Foot

Used for supporting uneven surfaces.

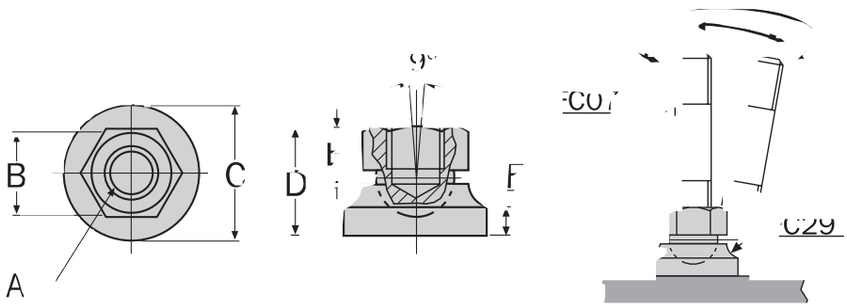

Material: Medium Carbon Steel.
Hardness: HRC 32 - 38.
Surface finish: Black Oxide.



Product Number	Size A	Dimensions (mm) B	C	D	E	F	Weight each	Order Code IND-425	Price/1 THB
FC290112	M12	19	35	24	11	7	80g	**-2870D**	**1565.00**
FC290216	M16	24	40	29	13	8	150g	**-2870G**	**1565.00**

FC40 - T-Slot Bolt

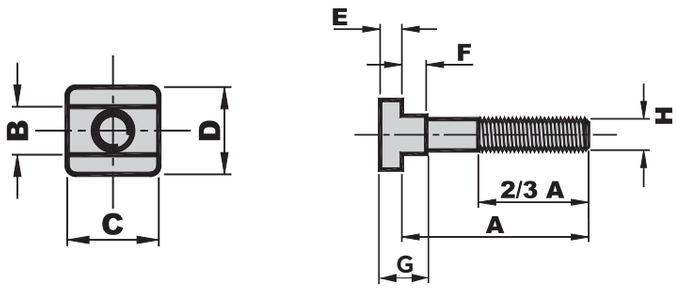

Material: Medium Carbon Steel.
Hardness: HRC 32 - 38.
Surface finish:
Black Oxide.



Product Number	Dimensions (mm) A	B	C	D	E	F	G	H	Weight each	Order Code IND-425	List Price/1	Price/1 THB
FC40- 1250	50								54g	**-2900D**	431.00	**431.00**
FC40- 1275	75								57g	**-2900F**	452.00	**452.00**
FC40- 12100	100	12	26	22	7	6	13	M12	110g	**-2900H**	462.00	**462.00**
FC40- 12125	125								125g	**-2900K**	504.00	**504.00**
FC40- 12150	150								140g	**-2900M**	504.00	**504.00**
FC40- 12175	175								170G	**-2900P**	961.00	**961.00**
FC40- 12200	200								185g	**-2900R**	567.00	**567.00**
FC40- 1650	50								130g	**-2910D**	536.00	**536.00**
FC40- 1675	75								160g	**-2910F**	546.00	**546.00**
FC40- 16100	100								200g	**-2910H**	567.00	**567.00**
FC40- 16125	125	16	32	27	8	8	16	M16	230g	**-2910K**	609.00	**609.00**
FC40- 16150	150								270g	**-2910M**	641.00	**641.00**
FC40- 16175	175								305g	**-2910P**	704.00	**704.00**
FC40- 16200	200								325g	**-2910R**	788.00	**788.00**
FC40- 2075	75								290g	**-2920F**	704.00	**704.00**
FC40- 20100	100								350g	**-2920H**	788.00	**788.00**
FC40- 20125	125	20	40	30	11	11	22	M20	400g	**-2920K**	819.00	**819.00**
FC40- 20150	150								455g	**-2920M**	893.00	**893.00**
FC40- 20175	175								505g	**-2920P**	966.00	**966.00**
FC40- 20200	200								560g	**-2920R**	1082.00	**1082.00**
FC40- 24150	150	24	50	44	16	15	31	M24	775g	**-2930M**	1743.00	**1743.00**
FC40- 24200	200								925g	**-2930R**	1964.00	**1964.00**

© 2022

OS21_APAC_TH_0136.indd 1 07/12/2021 13:11